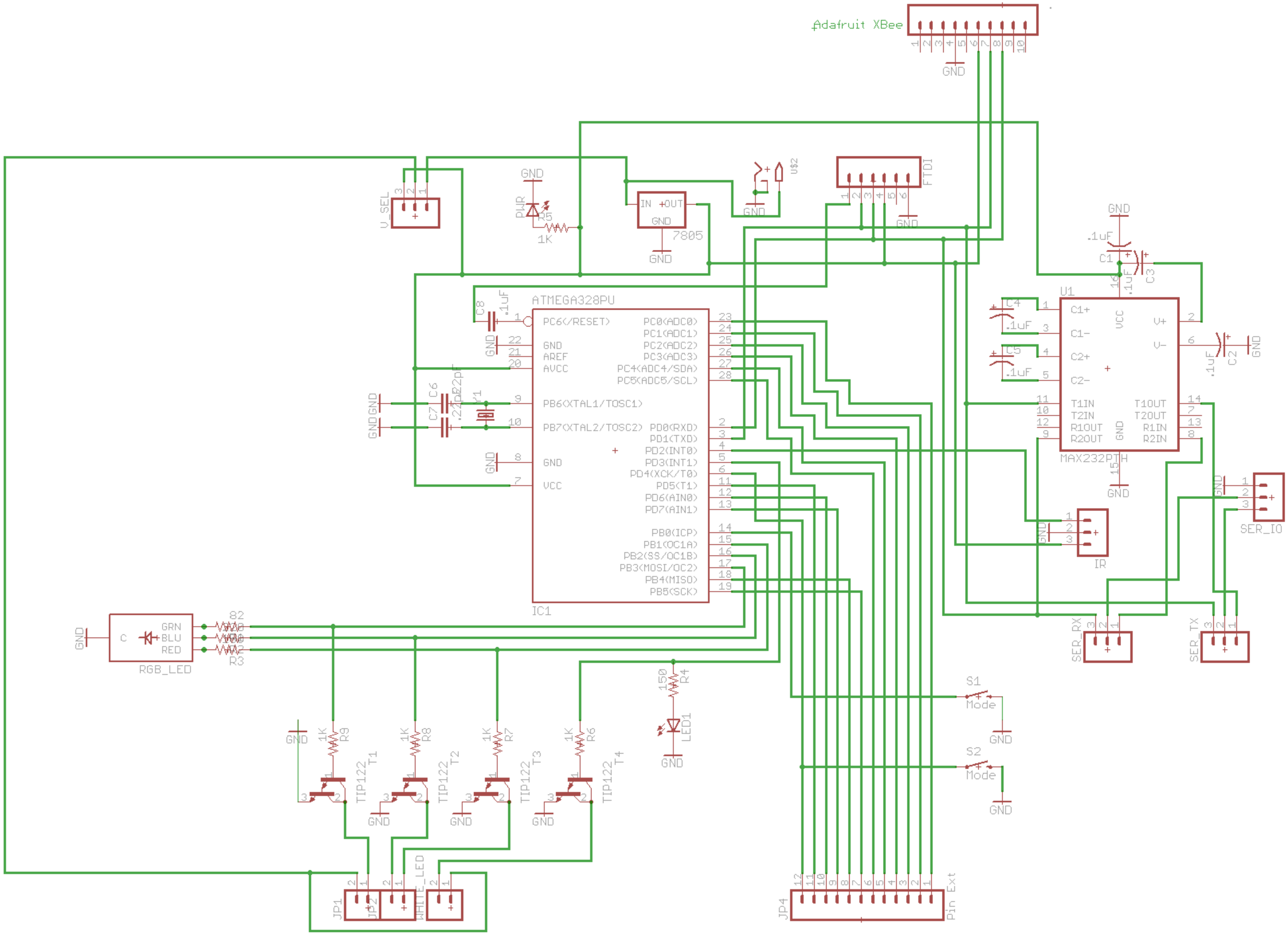
Adafruit XBee
GND
V_SEL
PWR
R5
1K
IN
OUT
7805
U$2
FTDI
.1uF
C1
C3
U1
C4
C5
C1+
C1-
C2+
C2-
VCC
V+
V-
T1IN
T2IN
R1OUT
R2OUT
T1OUT
T2OUT
R1IN
R2IN
MAX232PTH
C2
SER_IO
IR
SER_RX
SER_TX
ATMEGA328PU
C8
PC6(/RESET)
PC0(ADC0)
PC1(ADC1)
PC2(ADC2)
PC3(ADC3)
PC4(ADC4/SDA)
PC5(ADC5/SCL)
AREF
AVCC
PB6(XTAL1/TOSC1)
PB7(XTAL2/TOSC2)
PD0(RXD)
PD1(TXD)
PD2(INT0)
PD3(INT1)
PD4(XCK/T0)
PD5(T1)
PD6(AIN0)
PD7(AIN1)
PB0(ICP)
PB1(OC1A)
PB2(SS/OC1B)
PB3(MOSI/OC2)
PB4(MISO)
PB5(SCK)
IC1
C6
C7
22pF
Y1
RGB_LED
GRN
BLU
RED
R2
R3
150
R4
LED1
1K
R9
R8
R7
R6
TIP122
T1
T2
T3
T4
S1
Mode
S2
JP1
JP2
WHITE_LED
JP4
Pin Ext